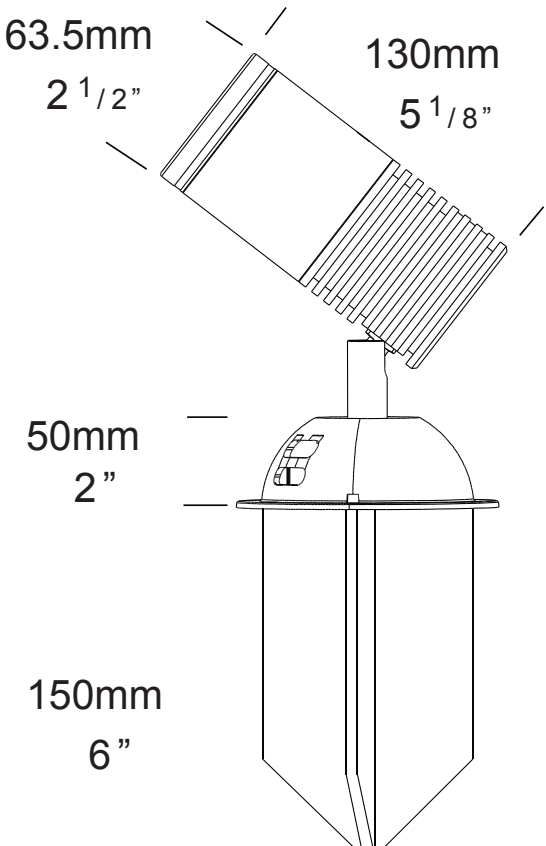
63.5mm
2 1/2”
130mm
5 1/8”
50mm
2”
150mm
6”

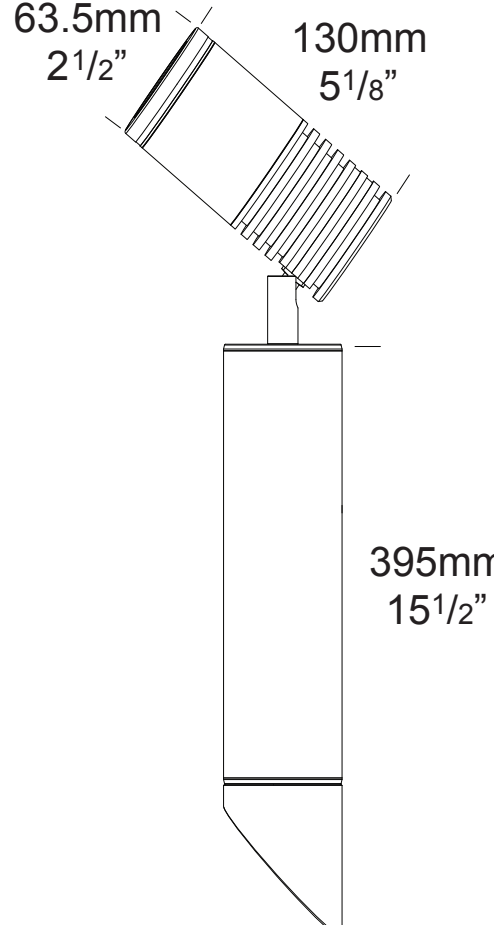
63.5mm
2 1/2”
130mm
5 1/8”
395mm
15 1/2”