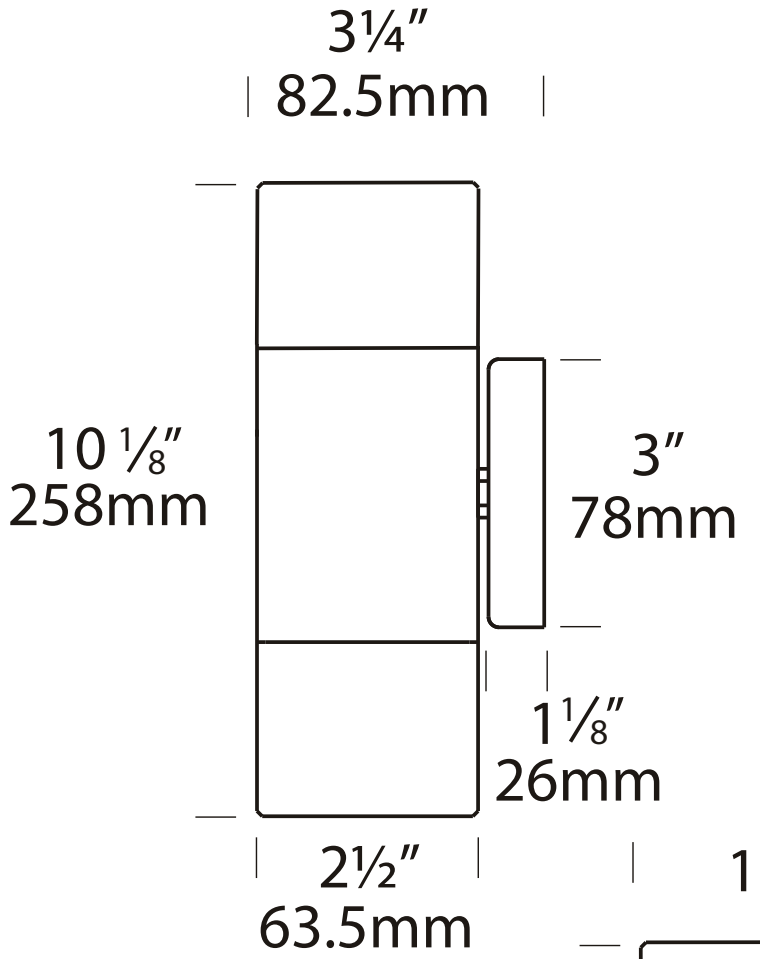
3¼″
82.5mm
10 ⅛″
258mm
3″
78mm
1⅛″
26mm
2½″
63.5mm

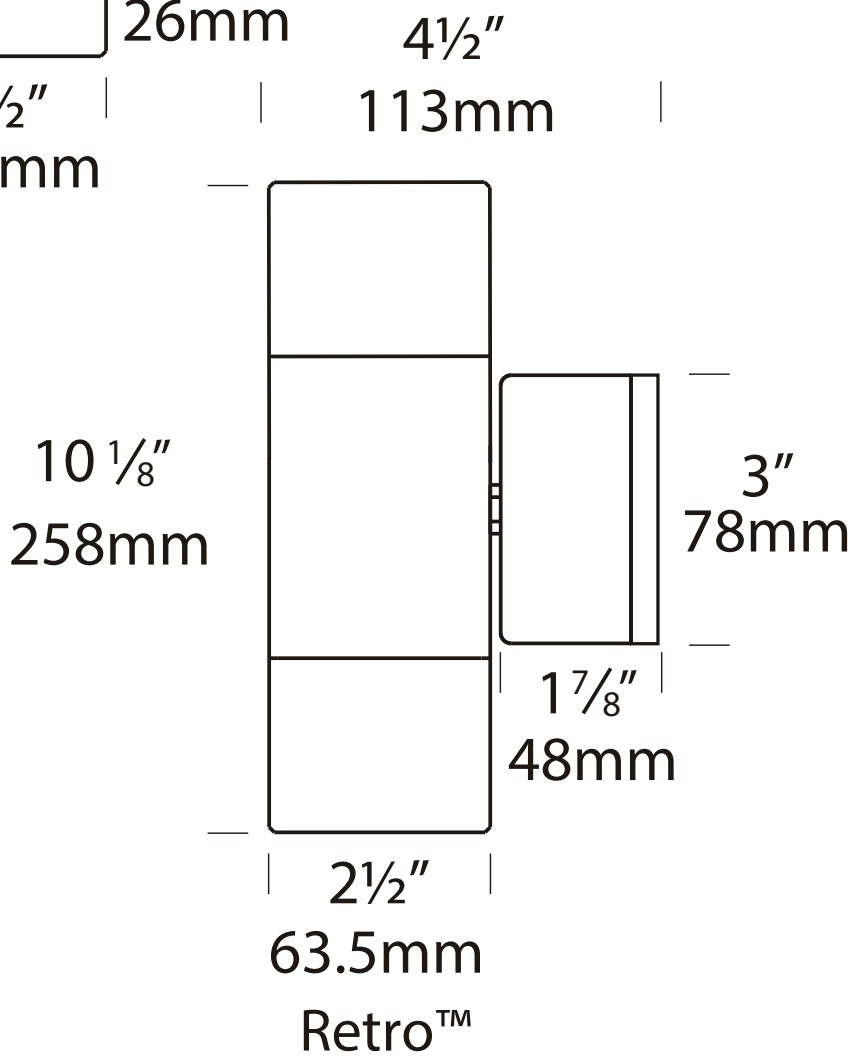
4½″
113mm
10 ⅛″
258mm
3″
78mm
1⅞″
48mm
2½″
63.5mm

Retro™