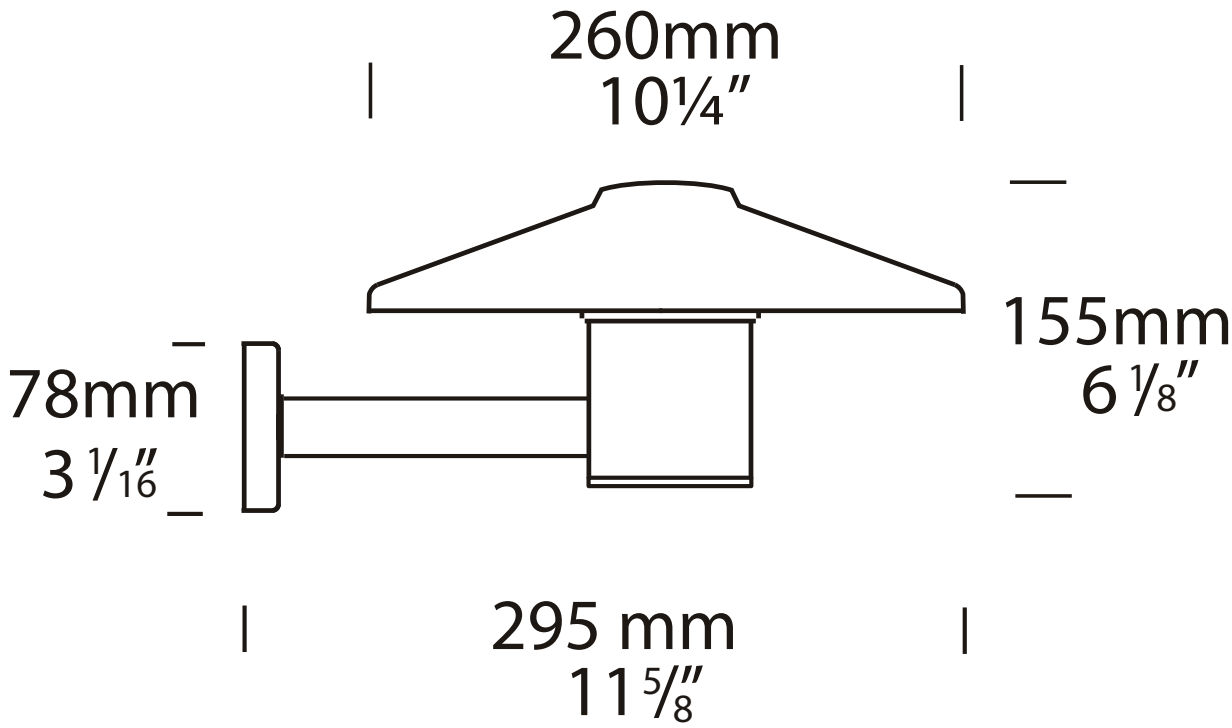
260mm
10¼″
155mm
6⅛″
78mm
3 1/16″
295 mm
11⅝″

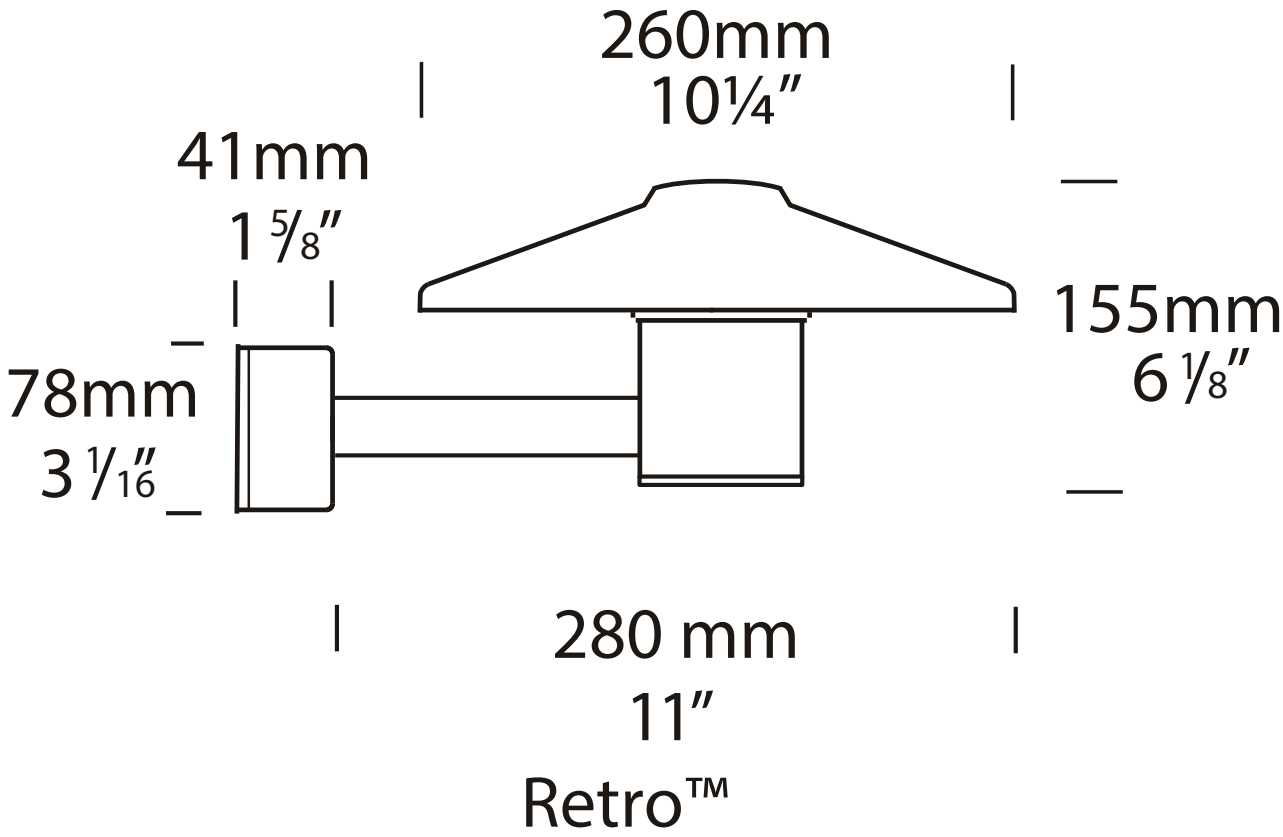
260mm
10¼″
41mm
1⅝″
155mm
6⅛″
78mm
3 1/16″
280 mm
11″

Retro™